SIGNAGE ACCESSORIES SUPPLIER

BALI FLAG TEMPLATE

BALI FLAG DD 04 C, D & F

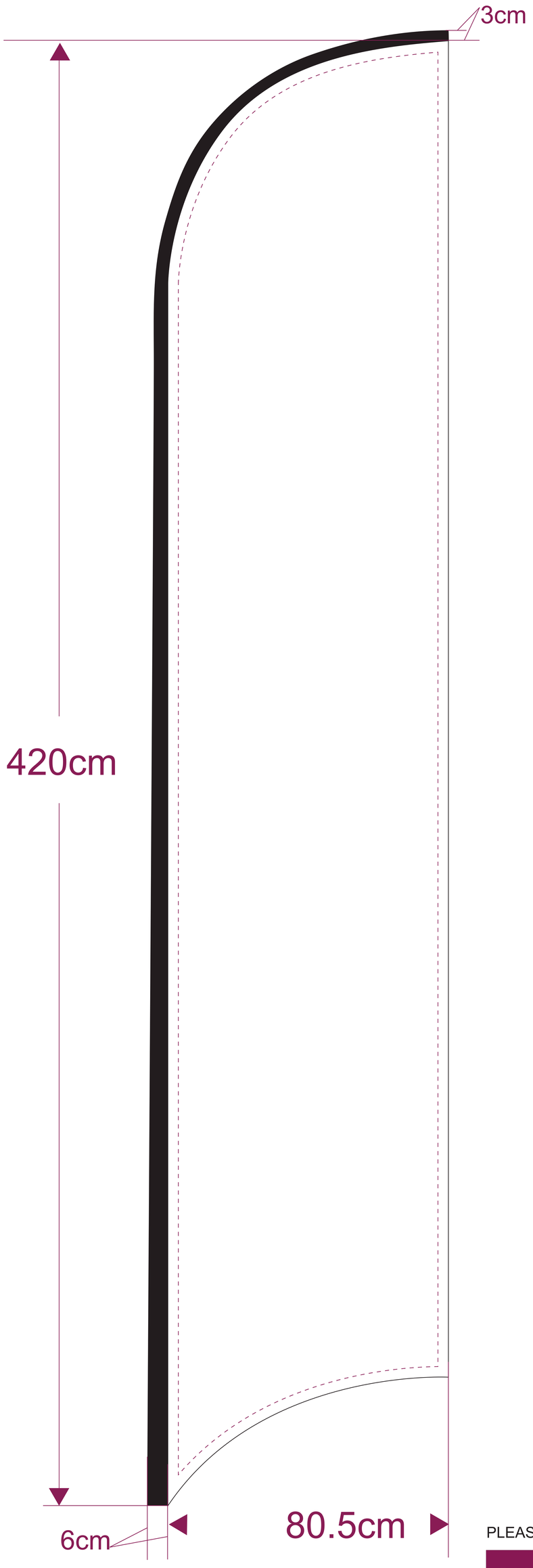

DD-04F 420x80CM

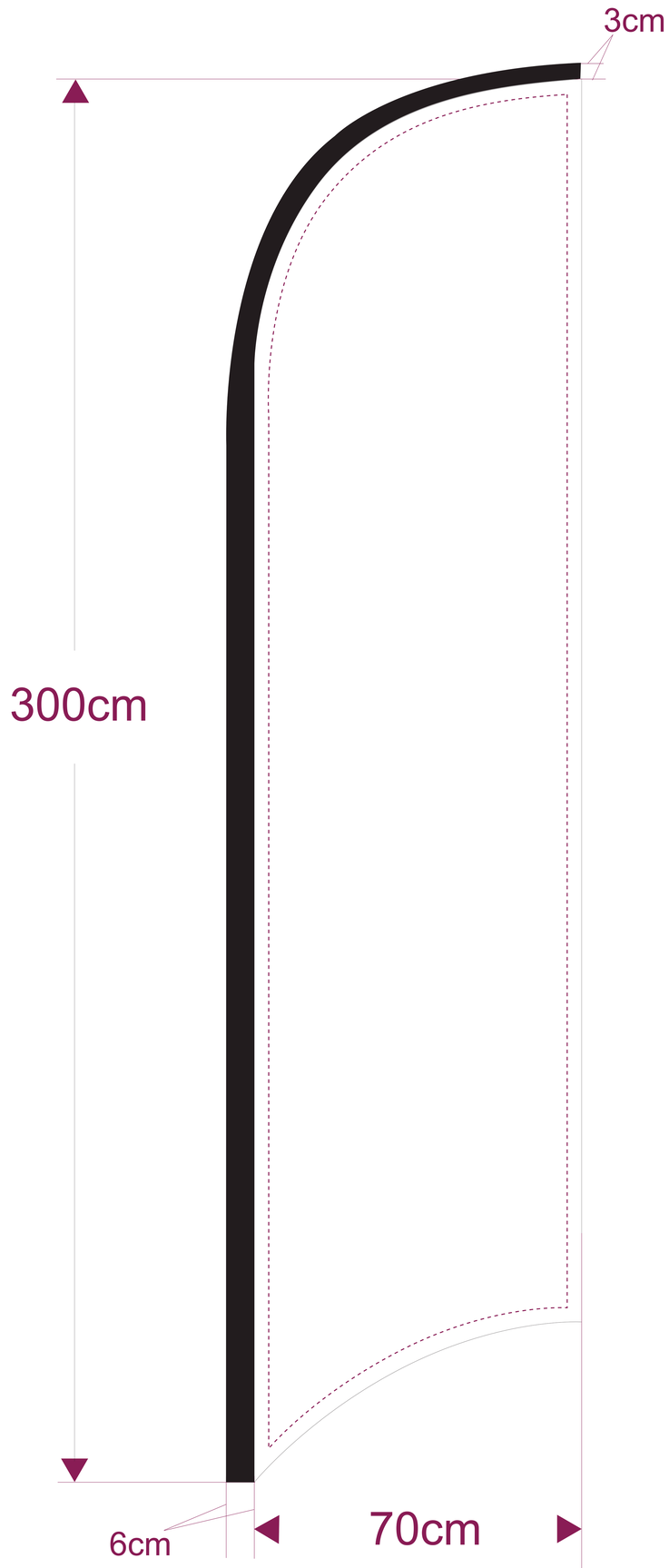

DD-04D 300x70CM

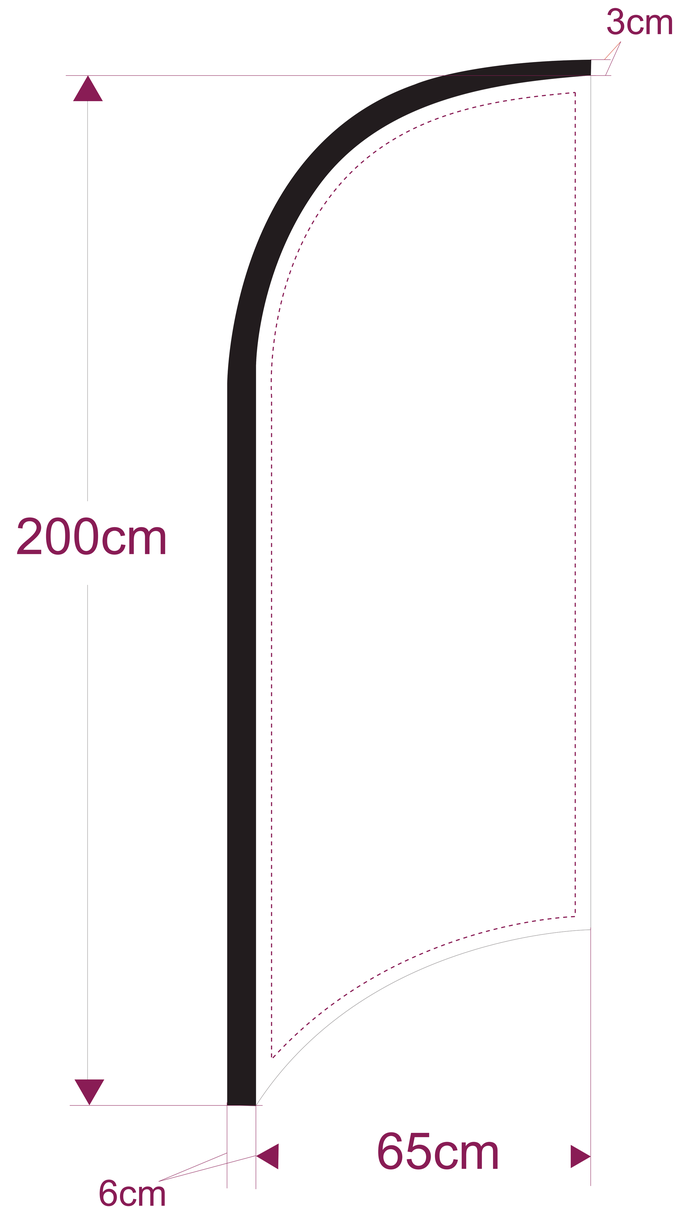

DD-04C 200x65CM

Scale: 100%

- - - - - - - Print Area
- - - - - - - Print Size
——— Pocket

PLEASE FILL OUT THE TABLE BELOW

QUANTITY	
SIZE	
POCKET COLOUR	

BALI FLAG TEMPLATE

****PLEASE CONVERT ALL FONTS TO CURVES****

Artwork needs to be provided in PDF format, no less than 300 dpi and saved in curves.
Please indicate how many flags required, whether double sided or single sided and the flag size for ease of reference.
ALL FLAGS COME WITH TRIM POCKETS
AVAILABLE COLOURS: White, Blue, Red and Black.

****PLEASE NOTE****

All pre-pay customers must pay a 50% deposit up front before printing.
Once artwork has been received production will commence and no cancellation or alterations will be accepted.

SIGNAGE ACCESSORIES SUPPLIER

BALI FLAG TEMPLATE
REVERSE SIDE
FOR DOUBLE SIDED FLAGS

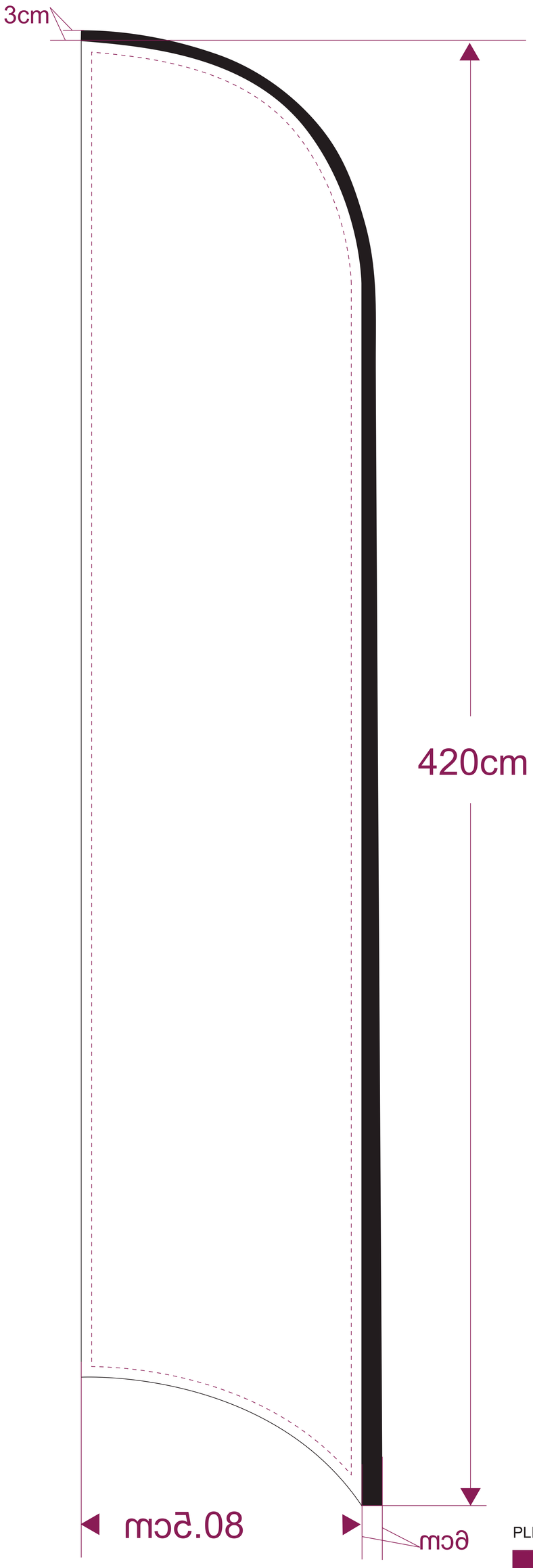

DD-04F 420x80CM

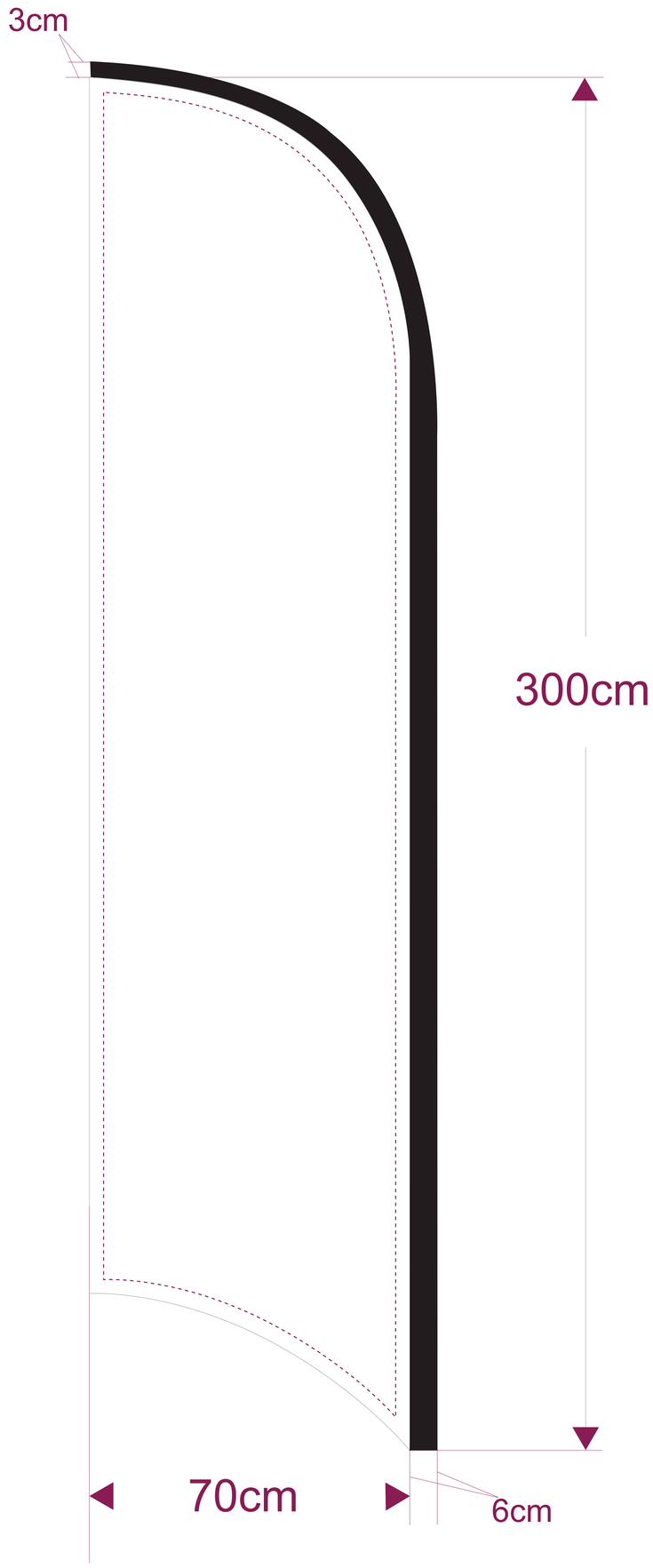

DD-04D 300x70CM

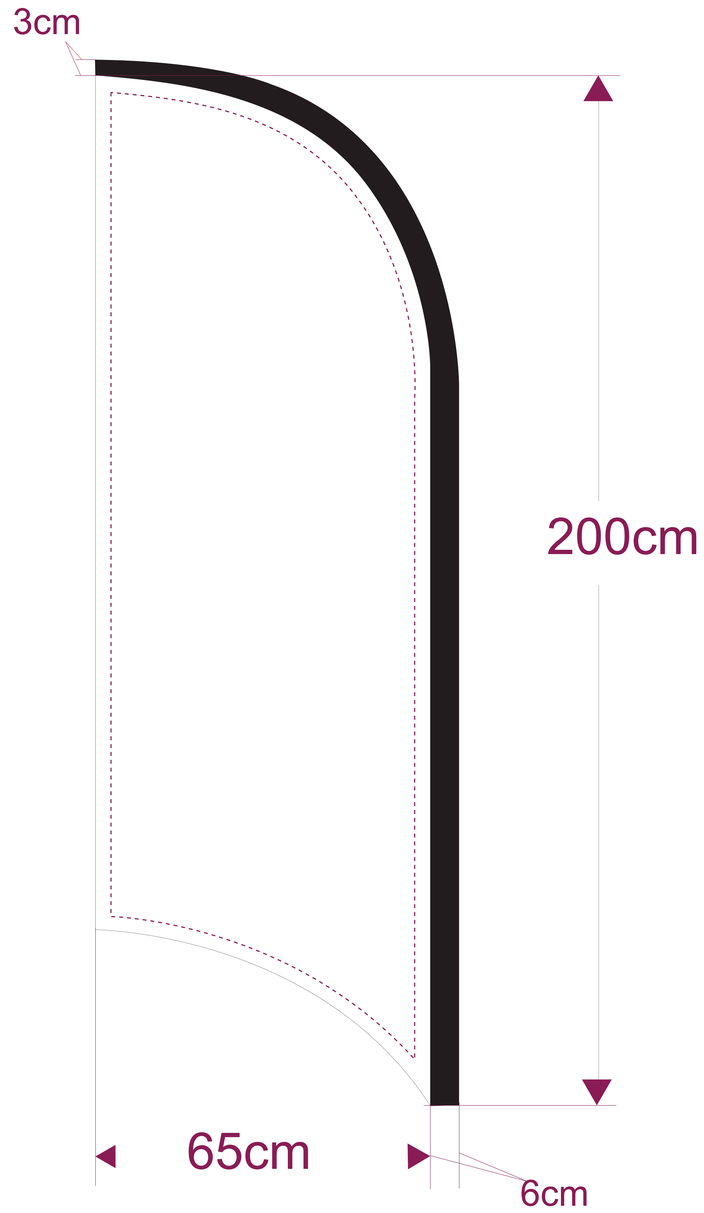

DD-04C 200x65CM

Scale: 100%

- - - - - - - Print Area
- - - - - - - Print Size
——— Pocket

PLEASE FILL OUT THE TABLE BELOW

QUANTITY	
SIZE	
POCKET COLOUR	

BALI FLAG TEMPLATE

****PLEASE CONVERT ALL FONTS TO CURVES****

Artwork needs to be provided in PDF format, no less than 300 dpi and saved in curves.
Please indicate how many flags required, whether double sided or single sided and the flag size for ease of reference.
ALL FLAGS COME WITH TRIM POCKETS
AVAILABLE COLOURS: White, Blue, Red and Black.

****PLEASE NOTE****

All pre-pay customers must pay a 50% deposit up front before printing.
Once artwork has been received production will commence and no cancellation or alterations will be accepted.