SIGNAGE ACCESSORIES SUPPLIER

TEAR DROP FLAG TEMPLATE

TEAR DROP FLAG DD 04 A,B & E

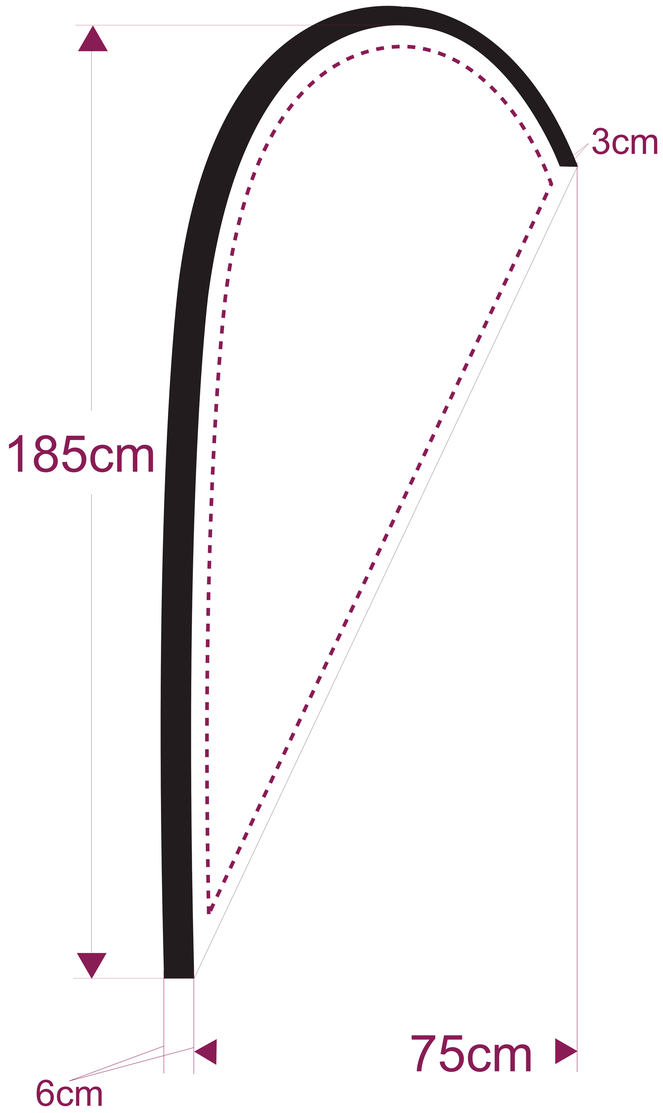

DD-04A 185x75CM

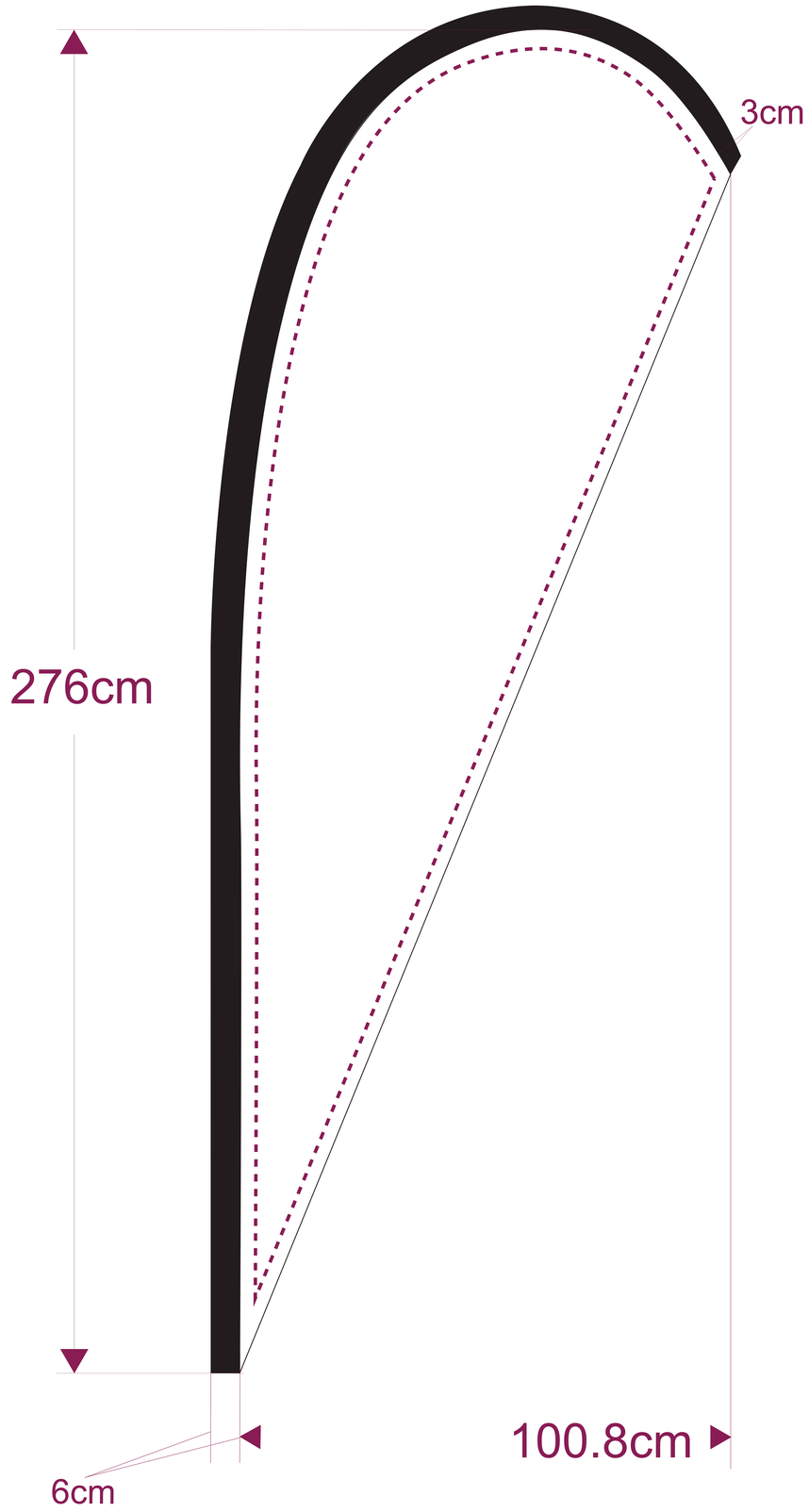

DD-04B 276x100.8CM

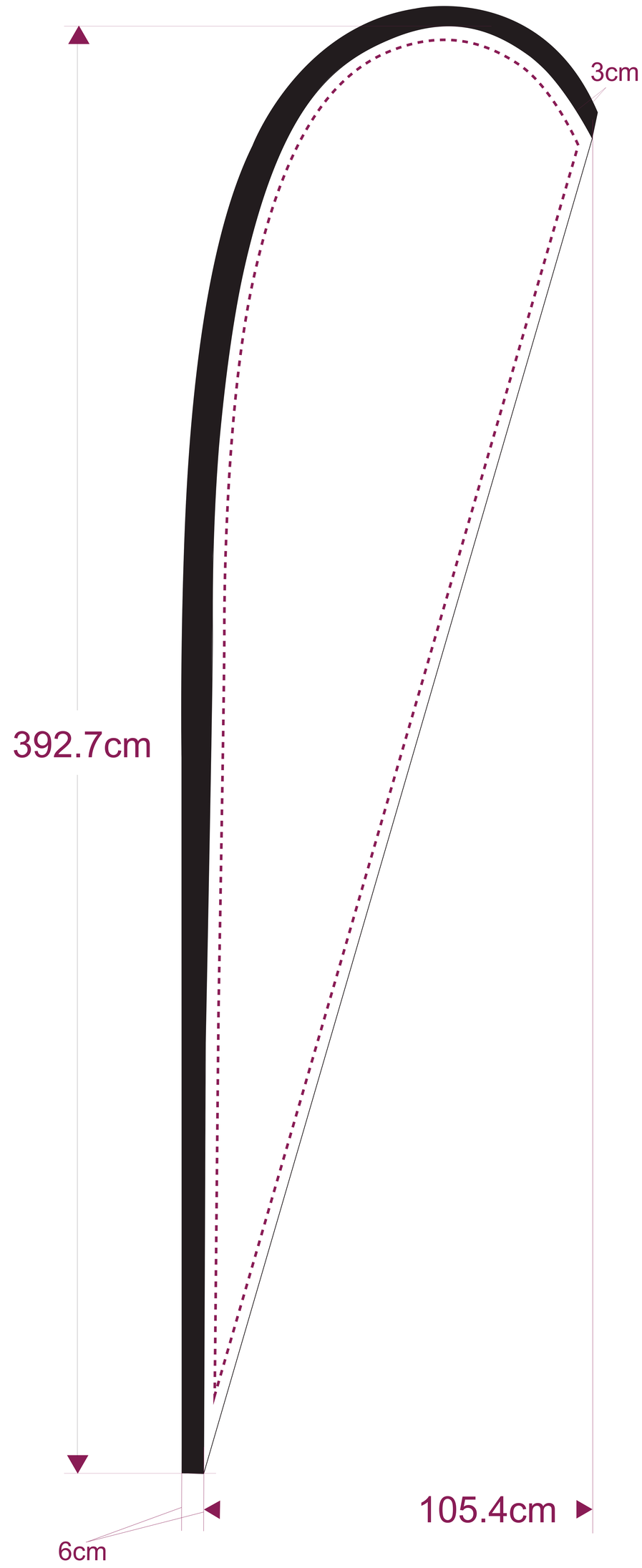

DD-04E 392.7x105.4CM

PLEASE FILL OUT THE TABLE BELOW

QUANTITY	
SIZE	
POCKET COLOUR	

Scale: 100%

- - - - - - - Print Area
- - - - - - - Print Size
——— Pocket

TEAR DROP TEMPLATE

****PLEASE CONVERT ALL FONTS TO CURVES****

Artwork needs to be provided in PDF format, no less than 300 dpi and saved in curves.
Please indicate how many flags required, whether double sided or single sided and the flag size for ease of reference.
ALL FLAGS COME WITH TRIM POCKETS
AVAILABLE COLOURS: White, Blue, Red and Black.

****PLEASE NOTE****

All pre-pay customers must pay a 50% deposit up front before printing.
Once artwork has been received production will commence and no cancellation or alterations will be accepted.

SIGNAGE ACCESSORIES SUPPLIER

TEAR DROP FLAG TEMPLATE
REVERSE SIDE
FOR DOUBLE SIDED FLAGS

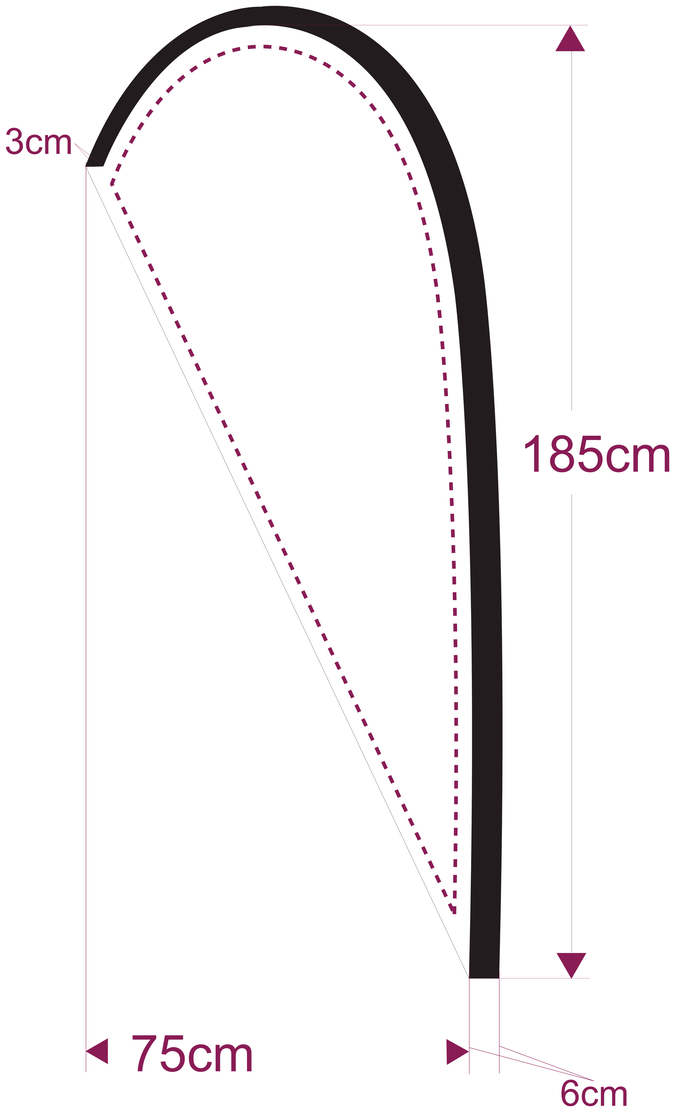

DD-04A 185x75CM

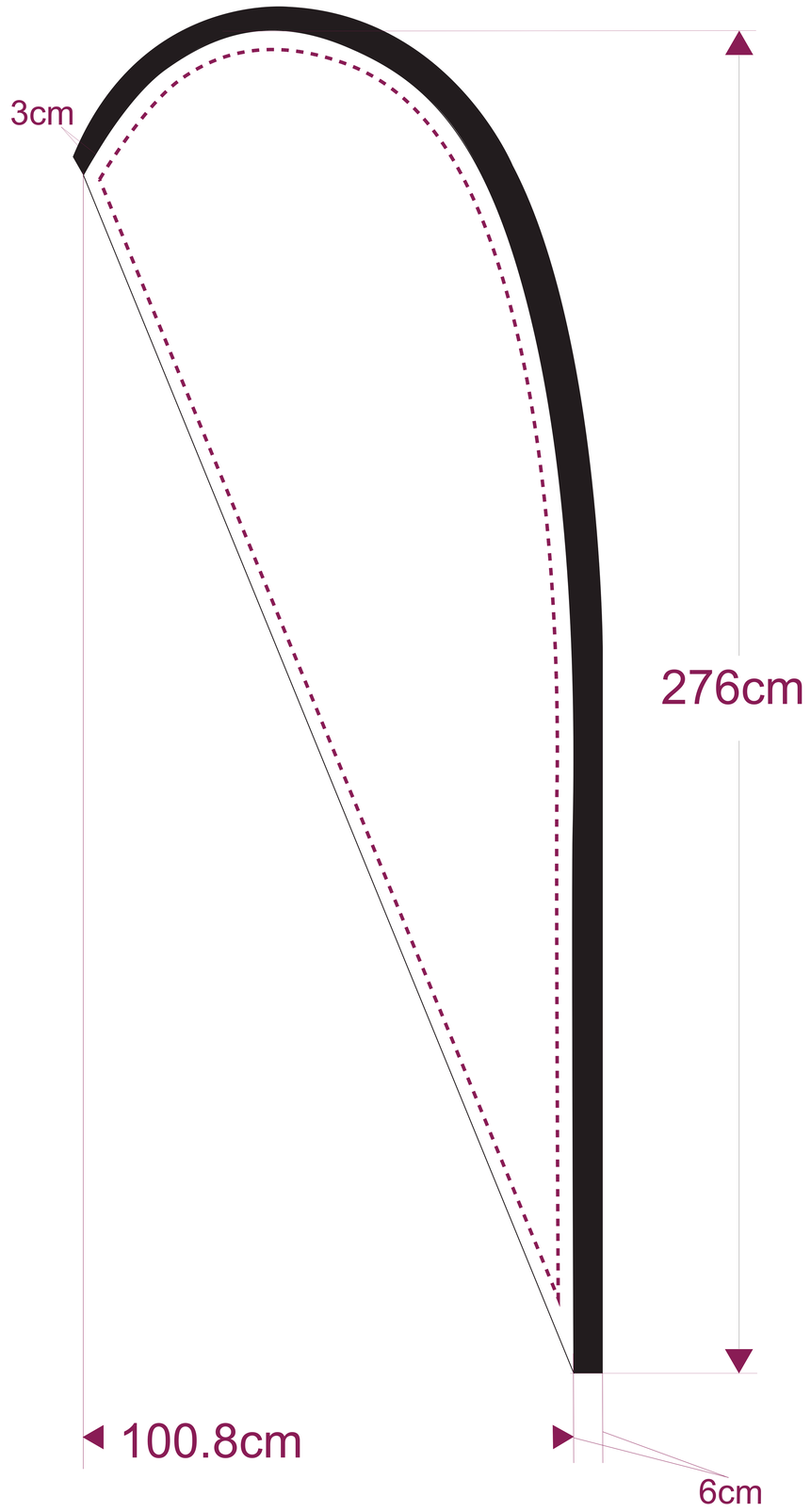

DD-04B 276x100.8CM

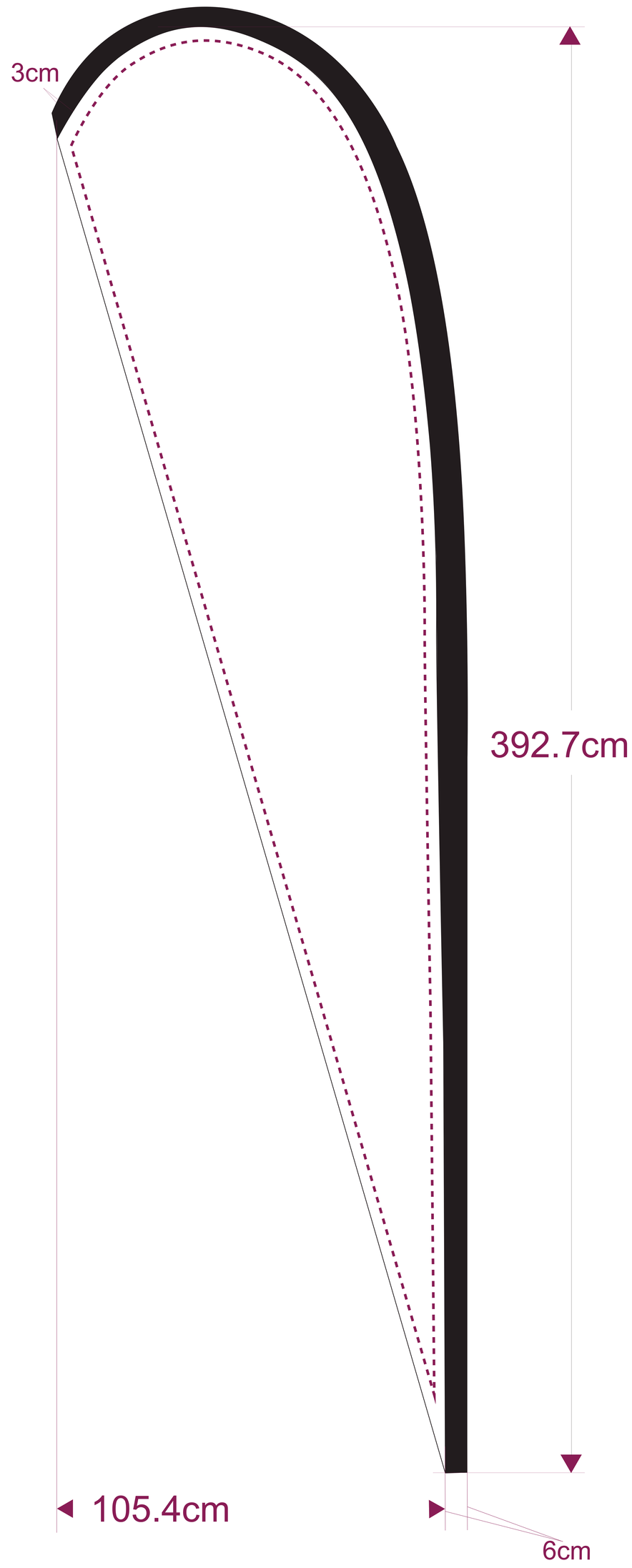

DD-04E 392.7x105.4CM

PLEASE FILL OUT THE TABLE BELOW

QUANTITY	
SIZE	
POCKET COLOUR	

Scale: 100%

- - - - - - - Print Area
- - - - - - - Print Size
——— Pocket

TEAR DROP TEMPLATE

****PLEASE CONVERT ALL FONTS TO CURVES****

Artwork needs to be provided in PDF format, no less than 300 dpi and saved in curves.
Please indicate how many flags required, whether double sided or single sided and the flag size for ease of reference.
ALL FLAGS COME WITH TRIM POCKETS
AVAILABLE COLOURS: White, Blue, Red and Black.

****PLEASE NOTE****

All pre-pay customers must pay a 50% deposit up front before printing.
Once artwork has been received production will commence and no cancellation or alterations will be accepted.